Operator's Manual
PB-8010 H/T
Power Blower

⚠ WARNING

The engine exhaust from this product contains chemicals known to the State of California to cause cancer, birth defects, or other reproductive harm.

⚠ WARNING

Read and understand all provided literature before use. Failure to do so could result in serious injury.

This product complies with CAN ICES-2/NMB-2.

X7501200001

© 11/2018 ECHO Inc.

Downloaded from www.Manualslib.com manuals search engine

TABLE OF CONTENTS

Introduction 3
Servicing Information 3
Parts/Serial Number 3
Service 4
ECHO Consumer Product Support 4
Product Registration 4
Additional Literature 4
Safety 4
Manual Safety Symbols and Important Information 4
International Symbols 5
Personal Condition and Safety Equipment 7
Equipment 12
Emission Control (Exhaust & Evaporative) 13
CARB And EPA Emissions Control Information 13
Description 14
Contents 18
Assembly 19
Install Blower Pipes and Stick Handle 19
Install Blower Pipes 21
Operation 23
Fuel 24
Starting Cold Engine 27
Starting Warm Engine 29
Stopping Engine 30
Operating Blower 30
Maintenance 34
Skill Levels 34
Maintenance Intervals 35
Air Filter 36
Fuel Filter 37
Spark Plug 38
Cooling System 38
Exhaust System 39
Carburetor Adjustment 41
Throttle Cable Adjustment (PB-8010 T only) 43
Troubleshooting 44
Storage 46
Long Term Storage (Over 30 Days) 46
Specifications 47
Product Registration 48
Notes 50

© 11/2018 ECHO Inc.

Downloaded from www.Manualslib.com manuals search engine

INTRODUCTION

Specifications, descriptions and illustrative material in this literature are as accurate as known at the time of publication, but are subject to change without notice. Illustrations may include optional equipment and accessories, and may not include all standard equipment.

Read and understand all provided literature. Literature contains specifications and information for safety, operation, maintenance, storage and assembly specific to this product. Scan QR codes for more information.

For additional literature, including safety manuals where applicable, or questions regarding terms used in this manual, visit:

https://www.echo-usa.com/manuals

OR

https://www.shindaiwa-usa.com/manuals

SERVICING INFORMATION

Parts/Serial Number

Genuine ECHO Parts and Assemblies for your ECHO products are available only from an Authorized ECHO Dealer. When you do need to buy parts always have the Model Number and Serial Number of the unit with you. For future reference write them in the space provided below.

Model No. _____

Serial No. _____

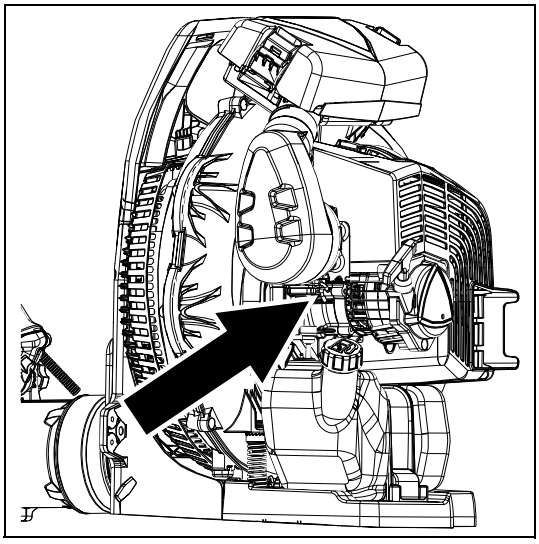

© 11/2018 ECHO Inc.

Downloaded from www.Manualslib.com manuals search engine

Service

Service of this product during the warranty period must be performed by an Authorized ECHO Service Dealer. For the name and address of the Authorized ECHO Service Dealer nearest you, ask your retailer or call: 1-800-432-ECHO (3246). Dealer information is also available on our Web Site www.echo-usa.com. When presenting your unit for Warranty service/ repairs, proof of purchase is required.

ECHO Consumer Product Support

If you require assistance or have questions concerning the application, operation, or maintenance of this product, call the ECHO Consumer Product Support Department at 1-800-673-1558 from 8:00 am to 5:00 pm (Central Standard Time) Monday through Friday. Before calling, please know the model and serial number of your unit.

Product Registration

Register your ECHO equipment on-line at www.echo-usa.com or by filling out the product registration sheet included in this manual. Registering your product confirms warranty coverage and provides a direct link to ECHO if we find it necessary to contact you.

Additional Literature

In addition to finding information online, information is available from your Authorized ECHO Service Dealer, or by contacting ECHO Inc., 400 Oakwood Road, Lake Zurich, IL 60047 (800-673-1558).

Safety Videos are available from your Authorized ECHO Service Dealer. A $5.00 shipping charge is required for each video.

SAFETY

Manual Safety Symbols and Important Information

Throughout this manual and on the product itself, you will find safety alerts and helpful, informational messages preceded by symbols or key words. The following is an explanation of those symbols and key words and what they mean to you.

© 11/2018 ECHO Inc.

Downloaded from www.Manualslib.com manuals search engine

DANGER

The safety alert symbol accompanied by the word "DANGER" calls attention to an act or condition which WILL lead to serious personal injury or death if not avoided.

WARNING

The safety alert symbol accompanied by the word "WARNING" calls attention to an act or condition which CAN lead to serious personal injury or death if not avoided.

CAUTION

The safety alert symbol accompanied by the word "CAUTION" calls attention to an act or condition which may lead to minor or moderate personal injury if not avoided.

NOTICE

The enclosed message provides information necessary for the protection of the unit.

Note: This enclosed message provides tips for use, care and maintenance of the unit.

CIRCLE AND SLASH SYMBOL
This symbol means the specific action shown is prohibited. Ignoring these prohibitions can result in serious or fatal injury.

International Symbols

Symbol	Description	Symbol	Description
	Read and Understand the Operator's Manual	H	Carburetor Adjustment - High Speed Mixture
	Wear Eye, Ear and Head Protection	T	Carburetor Adjustment - Idle Speed
	Wear Hand Protection	L	Carburetor Adjustment - Low Speed Mixture

© 11/2018 ECHO Inc.

Downloaded from www.Manualslib.com manuals search engine

Symbol	Description	Symbol	Description
	Safety/Alert	STOP	Emergency Stop
	Hot Surface		Fuel and Oil Mixture
	Idle speed		Fast speed
	Finger severing		Primer Bulb
	DO NOT Allow Flames or Sparks Near Fuel	Ignition ON I OFF O	Ignition ON / OFF
	DO NOT Smoke Near Fuel		Choke Control “COLD START” Position (Choke Closed)
	Choke Control “RUN” Position (Choke Open)		Wear Slip Resistant Footwear
		Beware of thrown objects	
360° 15m (50ft)		Keep Bystanders and Helpers Away 15 m (50 ft.).	

© 11/2018 ECHO Inc.

Downloaded from www.Manualslib.com manuals search engine

Personal Condition and Safety Equipment

WARNING

Cancer and Reproductive Harm
www.P65Warnings.ca.gov

WARNING

The muffler or catalytic muffler and surrounding cover may become extremely hot. Always keep clear of exhaust and muffler area, otherwise serious personal injury may occur.

WARNING

Users of this product risk injury to themselves and others if the unit is used improperly and/or safety precautions are not followed. Proper clothing and safety gear must be worn when operating unit.

Physical Condition

Your judgment and physical dexterity may not be good:

- If you are tired or sick
- If you are taking medication
- If you have taken alcohol or drugs

© 11/2018 ECHO Inc.

Downloaded from www.Manualslib.com manuals search engine

Operate unit only if you are physically and mentally well.

Eye Protection

⚠ WARNING

- **Eye protection that meets ANSI Z87.1 or CE requirements must be worn whenever you operate the unit.**
- **For additional safety, a full-face shield may be worn over safety glasses or goggles to provide protection from sharp branches or flying debris.**

Hand Protection

Wear sturdy, no-slip, rubber work gloves to improve your grip on the handles. Gloves also provide protection against cuts and scratches, cold environments, and reduce the transmission of machine vibration to your hands.

Hearing/Ear Protection

ECHO recommends wearing hearing protection whenever unit is used.

Breathing Protection

Operators who are sensitive to dust or other common airborne allergens may need to wear a dust mask to prevent inhaling these materials while operating unit. Dust masks can provide protection against dust, plant debris, and other plant matter such as pollen. Make sure the mask does not impair your vision, and replace the mask as needed to prevent air restrictions.

Proper Clothing

Wear snug-fitting, durable clothing:

- Pants should have long legs, shirts should have long sleeves.
- DO NOT WEAR SHORTS.
- DO NOT WEAR TIES, SCARVES, JEWELRY, or clothing with loose or hanging items that could become entangled in moving parts or surrounding growth.
- Keep clothing buttoned or zipped, and keep shirt tails tucked in.

Wear sturdy work shoes with nonskid rubber soles:

- DO NOT WEAR OPEN TOED SHOES.
- DO NOT OPERATE UNIT BAREFOOTED.

© 11/2018 ECHO Inc.

Downloaded from www.Manualslib.com manuals search engine

Keep long hair away from engine and air intake. Retain hair with cap or net.

Heavy protective clothing can increase operator fatigue, which may lead to heat stroke. Schedule heavy work for early morning or late afternoon hours when temperatures are cooler.

WARNING

The components of this machine generate an electromagnetic field during operation, which may interfere with some pacemakers. To reduce the risk of serious or fatal injury, persons with pacemakers should consult with their physician and the pacemaker manufacturer before operating this machine. In the absence of such information, ECHO does not recommend the use of this machine by anyone who has a pacemaker.

Extended Operation / Extreme Conditions

CAUTION

Prolonged exposure to cold and/or vibration may result in injury. Read and follow all safety and operation instructions to minimize risk of injury. Failure to follow instructions may result in painful wrist/hand/arm injuries.

It is believed that a condition called Raynaud's Phenomenon, which affects the fingers of certain individuals, may be brought about by exposure to vibration and cold. Exposure to vibration and cold may cause tingling and burning sensations, followed by loss of color and numbness in the fingers. The following precautions are strongly recommended, because the minimum exposure, which might trigger the ailment, is unknown.

- Keep your body warm, especially the head, neck, feet, ankles, hands, and wrists.
- Maintain good blood circulation by performing vigorous arm exercises during frequent work breaks, and also by not smoking.
- Limit the hours of operation. Try to fill each day with jobs where operating the unit or other hand-held power equipment is not required.
- If you experience discomfort, redness, and swelling of the fingers followed by whitening and loss of feeling, consult your physician before further exposing yourself to cold and vibration.

© 11/2018 ECHO Inc.

Downloaded from www.Manualslib.com manuals search engine

Repetitive Stress Injuries (RSI)

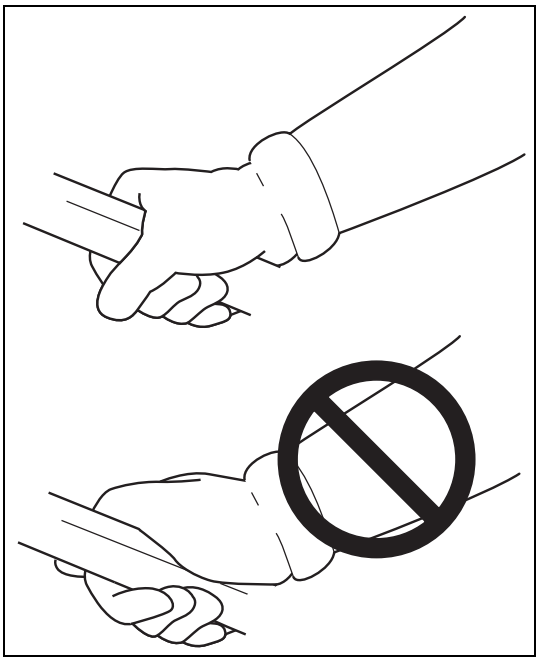

It is believed that overusing the muscles and tendons of the fingers, hands, arms, and shoulders may cause soreness, swelling, numbness, weakness, and extreme pain in those areas. Certain repetitive hand activities may put you at a high risk for developing a Repetitive Stress Injury (RSI). An extreme RSI condition is Carpal Tunnel Syndrome (CTS), which could occur when your wrist swells and squeezes a vital nerve that runs through the area. Some believe that prolonged exposure to vibration may contribute to CTS. CTS can cause severe pain for months or even years.

To reduce the risk of RSI/CTS, do the following:

- Avoid using your wrist in a bent, extended, or twisted position. Instead try to maintain a straight wrist position. Also, when grasping, use your whole hand, not just the thumb and index finger.
- Take periodic breaks to minimize repetition and rest your hands.
- Reduce the speed and force with which you do the repetitive movement.
- Do exercises to strengthen the hand and arm muscles.
- Immediately stop using all power equipment and consult a doctor if you feel tingling, numbness, or pain in the fingers, hands, wrists, or arms. The sooner RSI/CTS is diagnosed, the more likely permanent nerve and muscle damage can be prevented.

⚠ DANGER

All over head electrical conductors and communications wires can have electricity flow with high voltages. This unit is not insulated against electrical current. Never touch wires directly or indirectly, otherwise serious injury or death may result.

© 11/2018 ECHO Inc.

Downloaded from www.Manualslib.com manuals search engine

⚠ DANGER

Do not operate this product indoors or in inadequately ventilated areas. Engine exhaust contains poisonous emissions and can cause serious injury or death.

Read the Manual

- Provide all users of this equipment with literature for instructions on safe operation.

Clear the Work Area

- Clear the area of children, bystanders, and pets. At a minimum, keep all children, bystanders, and pets outside a 15 m (50 ft.) radius; outside the 15 m (50 ft.) zone, there is still a risk of injury from thrown objects. Bystanders should be encouraged to wear eye protection. If you are approached, stop the engine.
- Avoid blowing debris towards people, pets, open windows, or vehicles when using unit.
- Review area to be cleared. Look for potential hazards such as stones or metal objects.

Keep a Firm Grip

- To prevent from dropping the unit, hold the handle in one hand, with thumb and fingers encircling the handle.

Keep a Solid Stance

- Maintain footing and balance at all times. Do not stand on slippery, uneven or unstable surfaces. Do not work in odd positions or on ladders. Do not over reach.

Avoid Hot Surfaces

- Keep exhaust area clear of flammable debris. Avoid contact during and immediately after operation.

© 11/2018 ECHO Inc.

Downloaded from www.Manualslib.com manuals search engine

Equipment

WARNING

Use only approved attachments. Serious injury may result from the use of a non-approved attachment combination. ECHO, INC. will not be responsible for the failure of cutting devices, attachments or accessories which have not been tested and approved by ECHO. Read and comply with all safety instructions listed in this manual.

- **Check unit for loose/missing nuts, bolts, and screws. Tighten and/or replace as needed.**
- **Do not use blower if any part is missing or damaged.**
- **Have repairs done only by an authorized service dealer.**

WARNING

Moving parts can amputate fingers or cause severe injuries. Keep hands, clothing and loose objects away from all openings.

- ***ALWAYS stop engine, disconnect spark plug, and make sure all moving parts have come to a complete stop before removing obstructions, clearing debris, or servicing unit.***
- ***DO NOT start or operate unit unless all guards and protective covers are properly assembled to unit.***
- ***NEVER reach into any opening while the engine is running. Moving parts may not be visible through openings.***

WARNING

Periodically Check fuel system (fuel lines, vent, grommet, fuel tank, and fuel cap) for leaks especially if the unit is dropped. If damage or leaks are found, do not use unit, otherwise serious personal injury or property damage may occur. Have unit repaired by an authorized servicing dealer before using.

© 11/2018 ECHO Inc.

Downloaded from www.Manualslib.com manuals search engine

EMISSION CONTROL (EXHAUST & EVAPORATIVE)

CARB And EPA Emissions Control Information

EMISSION CONTROL INFORMATION
ENGINE FAMILY: EHXS.0214EQ DISPLACEMENT: 21.2cc
EMISSION COMPLIANCE PERIOD: 50Hours
THIS ENGINE MEETS 2013 U.S.EPA EXH/EVP & CALIFORNIA
EXH/EVP EMISSION REGULATIONS FOR S.O.R.E. REFER TO OWNER'S
MANUAL FOR MAINTENANCE SPECIFICATIONS AND ADJUSTMENTS.
YAMABIKO CORP. MMM/YYYY E

The emission control system for the engine is EM (engine modification) and, if the second to last character of the Engine Family on the Emission Control Information label (sample below) is “B”, “C”, “K”, or “T”, the emission control system is EM and TWC (3-way catalyst). The fuel tank/fuel line emission control system is EVAP (evaporative emissions). Evaporative emissions for California models are only applicable to fuel tanks.

An Emission Control Label is located on the engine. (This is an EXAMPLE ONLY, information on label varies by engine FAMILY).

EMISSION CONTROL INFORMATION
ENGINE FAMILY: CEHXS.0214KL DISPLACEMENT: 21.2cc
EMISSION COMPLIANCE PERIOD: 300Hours
THIS ENGINE MEETS 2012 U.S. EPA EXH/EVP & CALIFORNIA
EXH/EVP EMISSION REGULATIONS FOR S.O.R.E. REFER TO OWNER'S
MANUAL FOR MAINTENANCE SPECIFICATIONS AND ADJUSTMENTS.
YAMABIKO CORP. MMM/YYYY E

Product Emission Durability (Emission Compliance Period)

The 50 or 300 hour emission compliance period is the time span selected by the manufacturer certifying the engine emissions output meets applicable emissions regulations, provided that approved maintenance procedures are followed as listed in the Maintenance Section of this manual.

© 11/2018 ECHO Inc.
Downloaded from www.Manualslib.com manuals search engine

DESCRIPTION

PB-8010 H

Locate the safety decal(s) on your unit. Make sure the decal(s) is legible and that you understand and follow the instructions on it. If a decal cannot be read, a new one can be ordered from your ECHO dealer. The safety decal is for example only. Your label may appear slightly different.

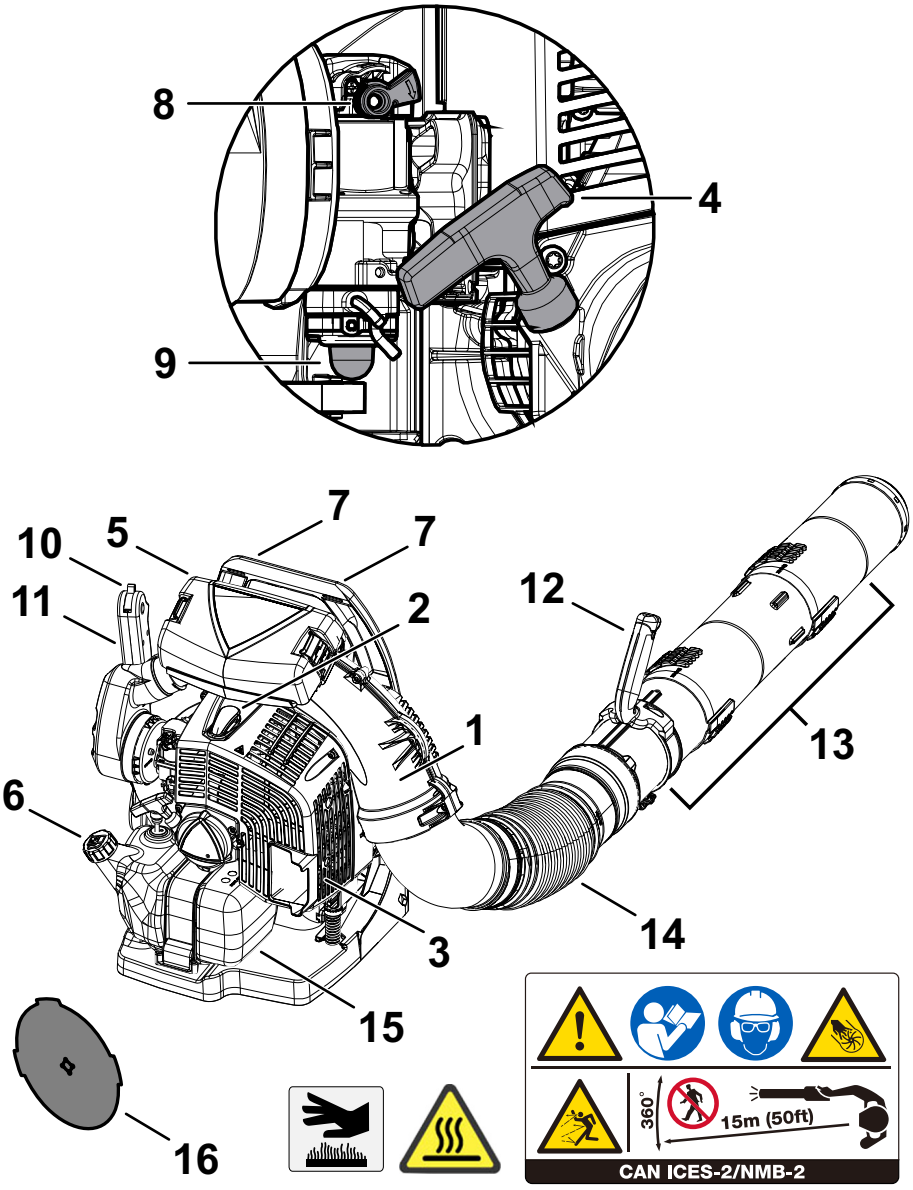

© 11/2018 ECHO Inc.

Downloaded from www.Manualslib.com manuals search engine

PB-8010 H

1. Safety Decal
2. Spark Plug
3. Spark Arrestor Muffler (with or without Catalyst)
4. Recoil Starter Handle
5. Air Cleaner
6. Fuel Tank Cap
7. Shoulder Harness
8. Choke
9. Purge Bulb
10. Throttle Position Lever/stop Switch
11. Handle
12. Stick Handle
13. Blower Pipes
14. Flexible Pipe
15. Fuel Tank
16. Cold Weather Insert

© 11/2018 ECHO Inc.
Downloaded from www.Manualslib.com manuals search engine

PB-8010 T

Locate the safety decal(s) on your unit. Make sure the decal(s) is legible and that you understand and follow the instructions on it. If a decal cannot be read, a new one can be ordered from your ECHO dealer. The safety decal is for example only. Your label may appear slightly different.

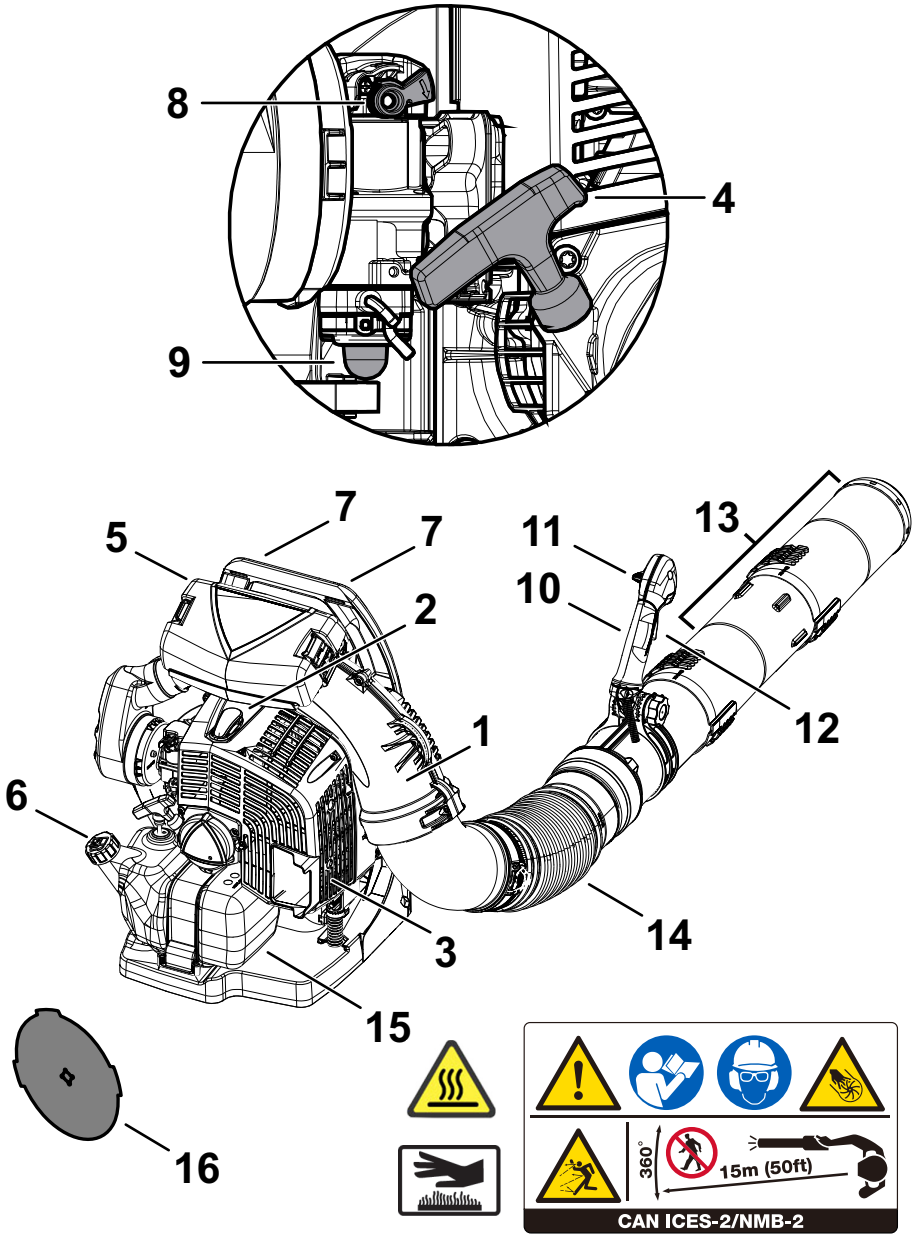

© 11/2018 ECHO Inc.

Downloaded from www.Manualslib.com manuals search engine

PB-8010 T

1. Safety Decal
2. Spark Plug
3. Spark Arrestor Muffler (with or without Catalyst)
4. Recoil Starter Handle
5. Air Cleaner
6. Fuel Tank Cap
7. Shoulder Harness
8. Choke
9. Purge Bulb
10. Handle
11. Throttle Position Lever
12. Throttle Trigger
13. Blower Pipes
14. Flexible Pipe
15. Fuel Tank
16. Cold Weather Insert

© 11/2018 ECHO Inc.
Downloaded from www.Manualslib.com manuals search engine

CONTENTS

The ECHO product you purchased has been factory pre-assembled for your convenience. Due to packaging restrictions, some assembly may be necessary.

After opening the carton, check for damage. Immediately notify your retailer or ECHO Dealer of damaged or missing parts. Use the contents list to check for missing parts.

PB-8010 H

1	Power Head
1	Flex Pipe
1	Swivel Pipe
1	Straight Pipe
1	End Pipe
1	Operator's Manual
2	Clamps (with screws)
1	Warranty Statement
1	Stick Handle
1	Intake Cover
1	Cold Weather Insert

PB-8010 T

1	Power Head
1	Flex Pipe
1	Swivel Pipe
1	Straight Pipe
1	End Pipe
1	Operator's Manual
2	Clamps (with screws)
1	Warranty Statement
1	Intake Cover
1	Cold Weather Insert

© 11/2018 ECHO Inc.

Downloaded from www.Manualslib.com manuals search engine

ASSEMBLY

PB-8010 H

⚠ WARNING

Never perform maintenance or assembly procedures with engine running or serious personal injury may result.

Install Blower Pipes and Stick Handle

1. Assemble clamps (A) onto both ends of flexible pipe (B).

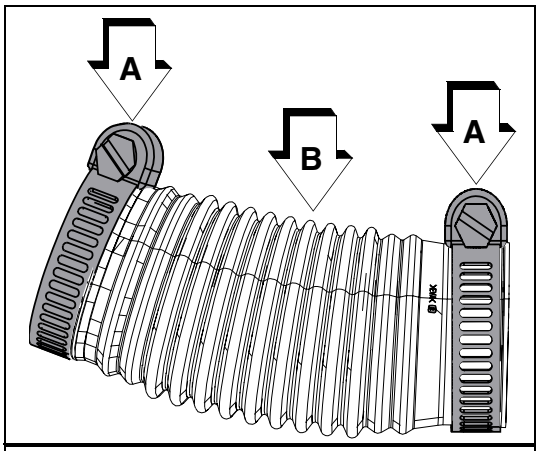

2. Insert anti-static wire through flex tube, into swivel pipe.

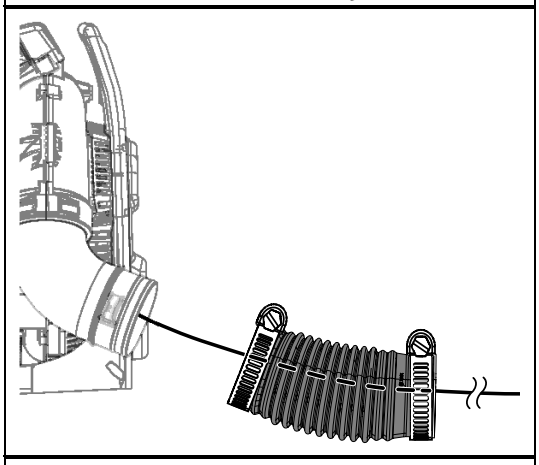

3. Assemble swivel pipe (C) into flexible pipe (B).
4. Assemble flexible pipe (B) to elbow (D) on blower and tighten clamps (A).

Note: A light lubricant may be used to ease assembly of flexible pipe to blower elbow.

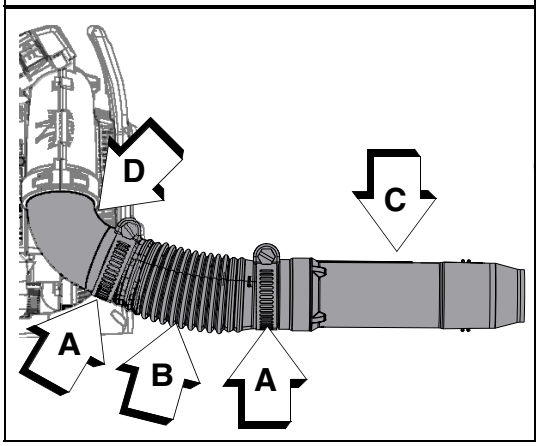

© 11/2018 ECHO Inc.

Downloaded from www.Manualslib.com manuals search engine

5. Loosen knob (E) completely and expand stick handle clamp. Align wire (G) in handle with grounding strip on swivel pipe (C).
6. Slide stick handle onto swivel pipe (C). Stick handle (F) should be angled away from operator.
7. Position stick handle (F) for comfortable operation. Tighten knob (E).

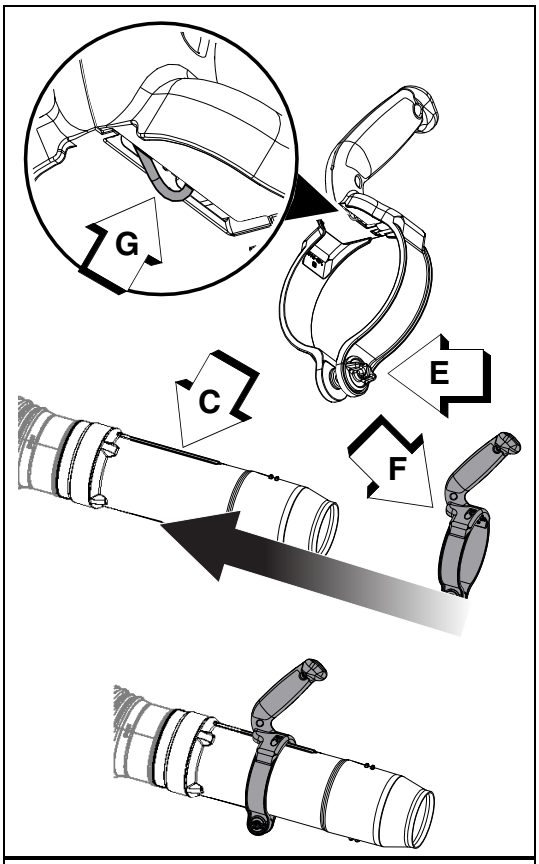

8. Assemble straight pipe (J) onto swivel pipe (C), until you feel light resistance. Hold swivel pipe and turn straight pipe clockwise, engaging positive locking channels, until connection is firm. Do not force connection.
9. Assemble end pipe (K) to straight pipe (J) the same as in step 8.

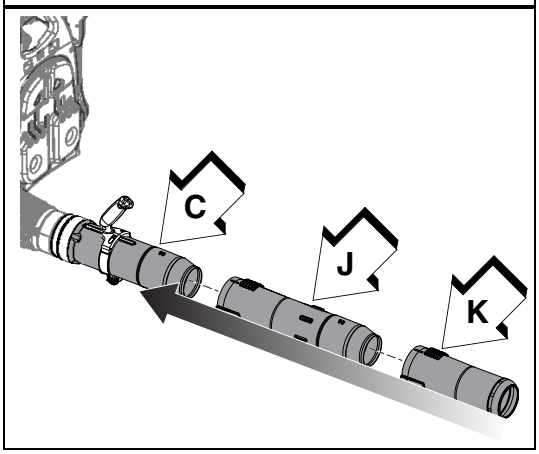

Note: Blower use will eventually loosen pipe connections. Exclusive positive locking system allows pipes to be tightened. If loosening occurs, remove two pipes and install according to steps 8 and 9.

© 11/2018 ECHO Inc.

Downloaded from www.Manualslib.com manuals search engine

PB-8010 T

WARNING

Never perform maintenance or assembly procedures with engine running or serious personal injury may result.

Install Blower Pipes

1. Assemble clamps (A) and (G) onto both ends of flexible pipe (B).

Note: Clamp with cable guide loop (G) fits elbow end of flexible pipe.

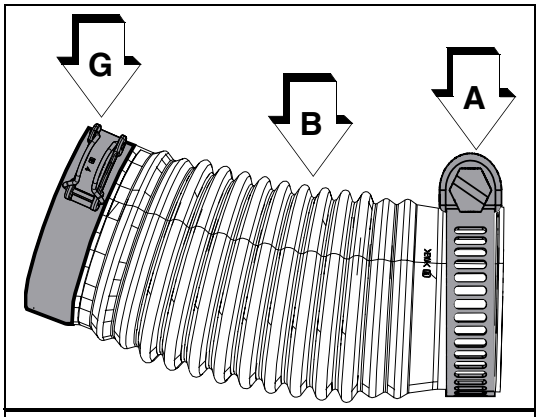

2. Insert anti-static wire through flex tube.

Note: A light lubricant may be used to ease assembly of flexible pipe to blower elbow.

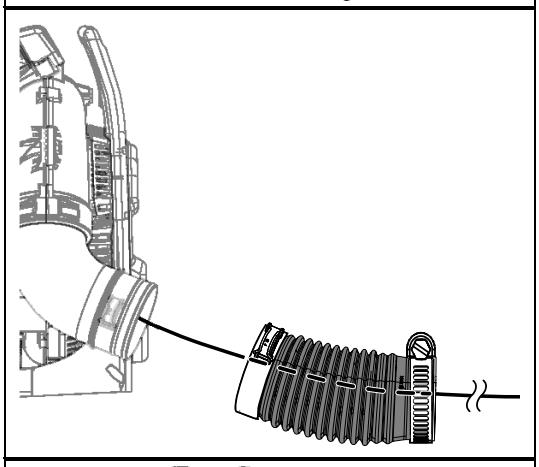

3. Assemble flexible pipe to elbow (D) on blower. Position clamp with cable guide loop (G) on outside of flexible pipe and tighten clamp.

Note: Hang handle freely from blower to assure throttle cable is not twisted before installing handle (E).

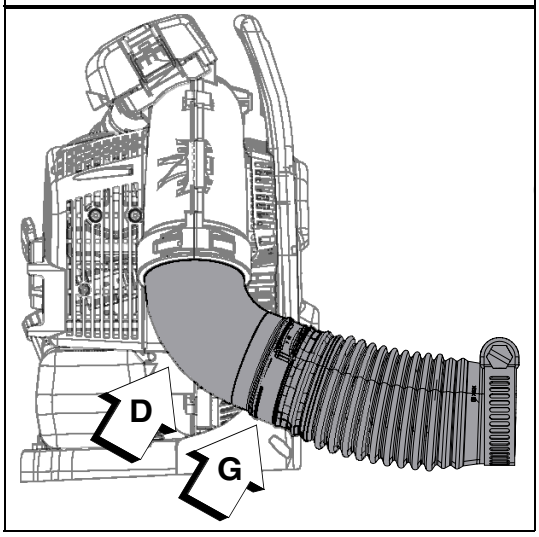

© 11/2018 ECHO Inc.

Downloaded from www.Manualslib.com manuals search engine

4. Position throttle cable along the outside of elbow. Loosen knob (H) on handle (E). Install onto swivel pipe (C).
5. Insert anti-static wire into swivel pipe.
6. Assemble swivel pipe into flexible pipe and tighten clamp (A).
7. Clip throttle cable into throttle cable guide loop.
8. Move handle (E) to desired position. Tighten knob (H).

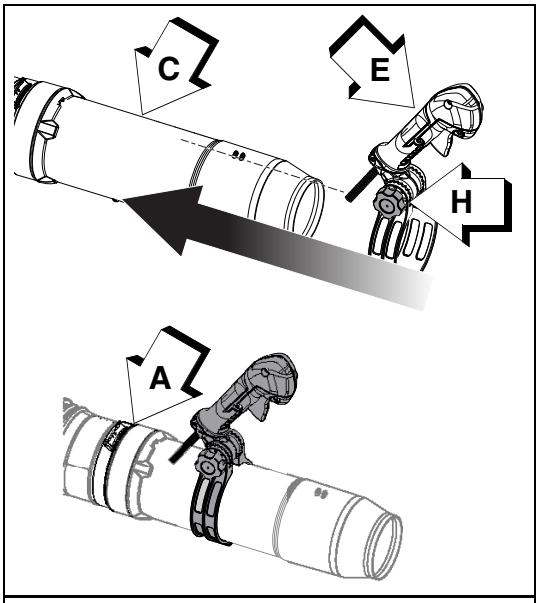

9. Assemble straight pipe (J) onto swivel pipe, until you feel light resistance. Hold swivel pipe and turn straight pipe clockwise, engaging positive locking channels, until connection is firm. Do not force connection.
10. Assemble end pipe (K) to straight pipe as in step 9.

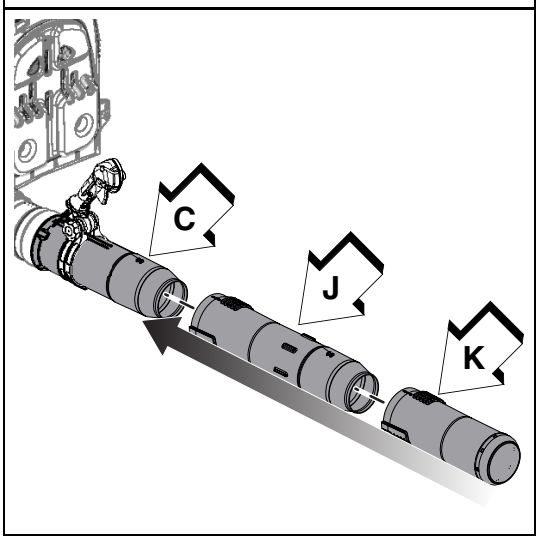

Note: Blower use will eventually loosen pipe connections. Exclusive positive locking system allows pipes to be tightened. If loosening occurs, remove two straight pipes and install according to steps 9 and 10.

© 11/2018 ECHO Inc.

Downloaded from www.Manualslib.com manuals search engine

OPERATION

WARNING

Moving parts can amputate fingers or cause severe injuries. Keep hands, clothing and loose objects away from all openings. Always stop engine, disconnect spark plug, and make sure all moving parts have come to a complete stop before removing obstructions, clearing debris, or servicing unit. Blower housing may contain shredder blades and other sharp edges that can cause serious injuries if touched, even if engine is off and blades are not moving. Wear gloves to protect hands from sharp edges and hot surfaces.

WARNING

Operation of this equipment may create sparks that can start fires around dry vegetation. This unit is equipped with a spark arrestor to prevent discharge of hot particles from the engine. Contact local fire authorities for laws or regulations regarding fire prevention requirements.

WARNING

Engine exhaust IS HOT, and contains Carbon Monoxide (CO), a poison gas. Breathing CO can cause unconsciousness, serious injury, or death. Exhaust can cause serious burns. ALWAYS position unit so that exhaust is directed away from your face and body.

WARNING

- **Always maintain a direct, clear line of site to the unit and the work being performed.**
- **Always be alert for changes in operation of unit.**
- **Always shut engine off before transporting unit to new location.**

© 11/2018 ECHO Inc.

Downloaded from www.Manualslib.com manuals search engine

Fuel

WARNING

Diesel fuels and alternative fuels, such as E-15 (15% ethanol), E -85 (85% ethanol) or any fuels not meeting ECHO requirements are NOT approved for use in ECHO 2-stroke gasoline engines. Use of diesel or alternative fuels may cause performance problems, loss of power, overheating, fuel vapor lock, and unintended machine operation, including, but not limited to, improper clutch engagement. Diesel or alternative fuels may also cause premature deterioration of fuel lines, gaskets, carburetors and other engine components.

Fuel Requirements

Gasoline - Use 89 Octane [R+M/2] (mid grade or higher) gasoline known to be good quality. Gasoline may contain up to 10% Ethanol (grain alcohol) or 15% MTBE (methyl tertiary-butyl ether). Gasoline containing methanol (wood alcohol) is **NOT** approved. Use of ECHO branded fuel is recommended to extend engine life in all air-cooled 2-stroke and 2/4-stroke hybrid engines.

Two Stroke Oil - A two-stroke engine oil, such as ECHO branded 2-stroke oils, meeting ISO-L-EGD (ISO/CD 13738) and J.A.S.O. FD Standards must be used. ECHO branded 2-stroke oils meet these standards. Engine problems due to inadequate lubrication caused by failure to use an ISO-L-EGD (ISO/CD 13738) and J.A.S.O. M345-FD certified oil will void the two-stroke engine warranty.

WARNING

2-Stroke engine oil contains petroleum distillates and other additives that may be harmful if swallowed. Heated oil can release vapors that can cause flash fire, or ignite with explosive force. Read and follow the oil manufacturer's instructions, and observe all safety warnings and precautions for handling flammable liquids. For more detailed safety and first aid information, visit www.echo-usa.com for a copy of the Material Safety Data Sheet.

- **KEEP OUT OF REACH OF CHILDREN.**
- **If swallowed, do not induce vomiting. CALL PHYSICIAN OR A POISON CONTROL CENTER IMMEDIATELY.**
- **WEAR SAFETY GLASSES when mixing or handling.**

© 11/2018 ECHO Inc.

Downloaded from www.Manualslib.com manuals search engine

- **AVOID repeated or prolonged skin contact**
- **AVOID inhaling oil mists or vapors.**

NOTICE

ECHO branded 2-stroke oils may be mixed at 50:1 ratio for application in all ECHO engines sold in the past regardless of ratio specified in those manuals.

Handling Fuel

DANGER

Fuel is VERY flammable. Use extreme care when mixing, storing or handling, or serious personal injury may result.

- ***Use an approved fuel container. Mark fuel containers as containing 2-stroke mixture fuel.***
- ***DO NOT smoke near fuel.***
- ***DO NOT allow flames or sparks near fuel.***
- ***Fuel tanks/cans may be under pressure. Always loosen fuel caps slowly allowing pressure to equalize.***
- ***NEVER refuel a unit when the engine is HOT or RUNNING!***
- ***DO NOT fill fuel tanks indoors. ALWAYS fill fuel tanks outdoors over bare ground.***
- ***DO NOT overfill fuel tank. Wipe up spills immediately.***
- ***Securely tighten fuel tank cap and close fuel container after refueling.***
- ***Inspect for fuel leakage. If fuel leakage is found, do not start or operate unit until leakage is repaired.***
- ***Move at least 3 m (10 ft.) from refueling location before starting the engine.***

DANGER

Gasoline vapor is heavier than air, and can travel along the ground to nearby sources of ignition such as electrical motors, pilot lights, and hot or running engines. Vapors ignited by an ignition source can flash back to the fuel container, resulting in an explosion, fire, serious or fatal injuries, and extensive property damage.

© 11/2018 ECHO Inc.

Downloaded from www.Manualslib.com manuals search engine

Mixing Instructions

1. Fill an approved fuel container with half of the required amount of gasoline.
2. Add the proper amount of 2-stroke oil to gasoline.
3. Close container and shake to mix oil with gasoline.
4. Add remaining gasoline, close fuel container, and remix.

Fuel to Oil Mix – 50:1 Ratio			
US		Metric	
Gas	Oil	Gas	Oil
gal.	fl.oz.	L	cc
1	2.6	5	100
2	5.2	10	200
5	13	25	500

NOTICE

Spilled fuel is a leading cause of hydrocarbon emissions. Some states may require the use of automatic fuel shut-off containers to reduce fuel spillage.

- Empty the fuel tank prior to storing the unit. Return unused fuel to an approved fuel storage container.

Storage - Fuel storage laws vary by locality. Contact your local government for the laws affecting your area. As a precaution, store fuel in an approved, airtight container. Store in a well-ventilated, unoccupied building, away from sparks and flames.

NOTICE

Stored fuel ages. Do not mix more fuel than you expect to use in 30 days, 90 days when a fuel stabilizer is added.

NOTICE

Stored two-stroke fuel may separate. ALWAYS shake fuel container thoroughly before each use.

NOTICE

Used oil and gasoline, and soiled towels are hazardous waste materials. Disposal laws vary by locality.

© 11/2018 ECHO Inc.

Downloaded from www.Manualslib.com manuals search engine

Starting Cold Engine

PB-8010 H only:

- Rotate spring loaded throttle arm downward to a comfortable operating position.

PB-8010 H/T:

- Recoil starter: Use short pulls - only 1/2- 2/3 of rope length for starting. Do not allow the rope to snap back in. Always hold the unit firmly.

1. *Throttle Lever*

   Move throttle lever (A) to IDLE position.

2. *Choke*

   Rotate choke (B) to COLD START position.

3. *Purge Bulb*

   Pump purge bulb (C) until fuel is visible. Pump bulb an additional 4 or 5 times.

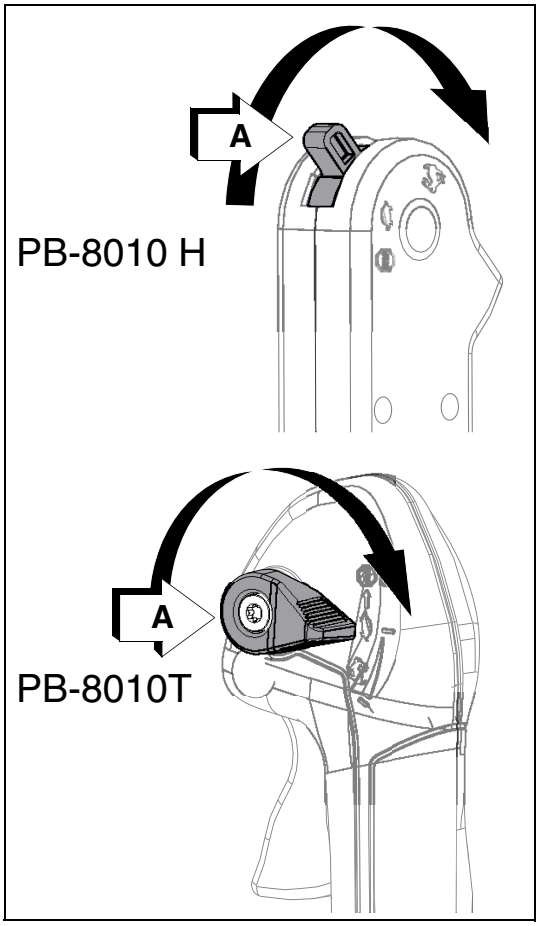

© 11/2018 ECHO Inc.

Downloaded from www.Manualslib.com manuals search engine

4. *Recoil Starter*

   Pull recoil starter handle (D) until engine fires, or a maximum of 5 pulls.

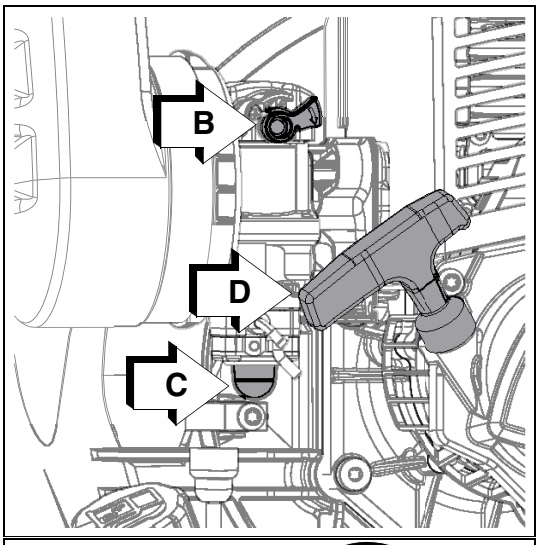

5. If engine fires and remains running, pull throttle trigger (T model) or advance throttle lever (H model) to automatically return choke to run position, then proceed to engine warm up. If engine fires and dies, proceed to step 6.
6. *Choke*

   After engine fires (or 5 pulls), move choke lever back to RUN position, then pull starter handle/rope until engine starts and runs. Allow unit to warm up at idle for several minutes.

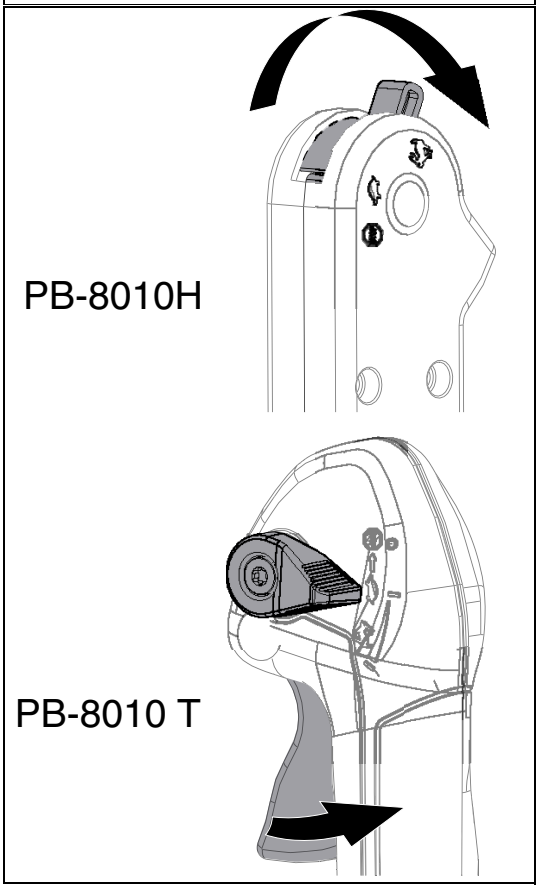

Note: If engine does not start with choke in “RUN” position after 5 pulls, move choke to COLD START position, and repeat steps 3- 6.

NOTICE

Allow engine to warm up for several minutes before use.

7. *Throttle Lever*

   After engine warm-up, move throttle lever gradually to increase engine RPM to desired operating speed.

© 11/2018 ECHO Inc.

Downloaded from www.Manualslib.com manuals search engine

Starting Warm Engine

The starting procedure is the same as Cold Start except DO NOT close the choke.

1. *Throttle Lever*

   Move throttle lever (A) to IDLE position.

2. *Purge Bulb*

   Pump purge bulb (C) until fuel is visible. Pump bulb an additional 4 or 5 times.

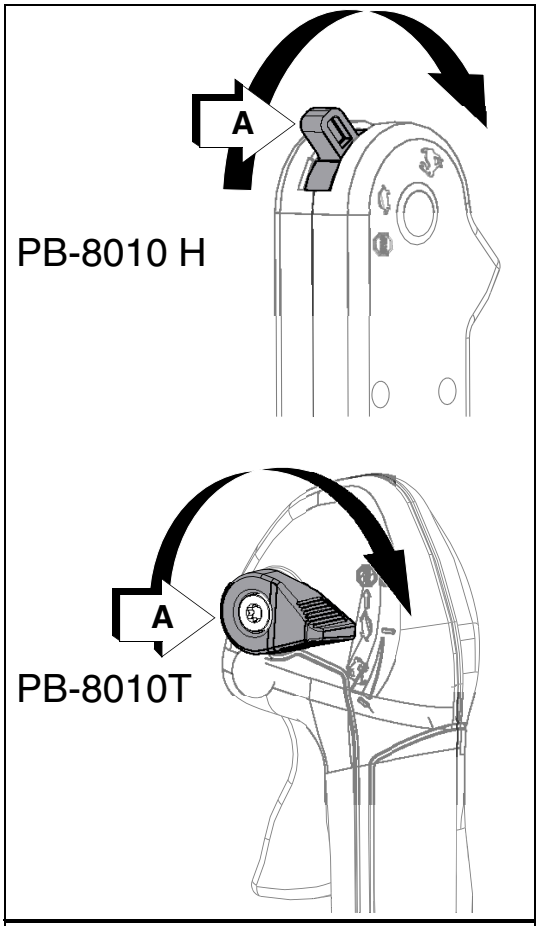

3. *Recoil Starter*

   Pull recoil starter handle (D) and engine should start. Do not use choke (B).

Note: If engine does not start after 5 pulls, use cold start procedures.

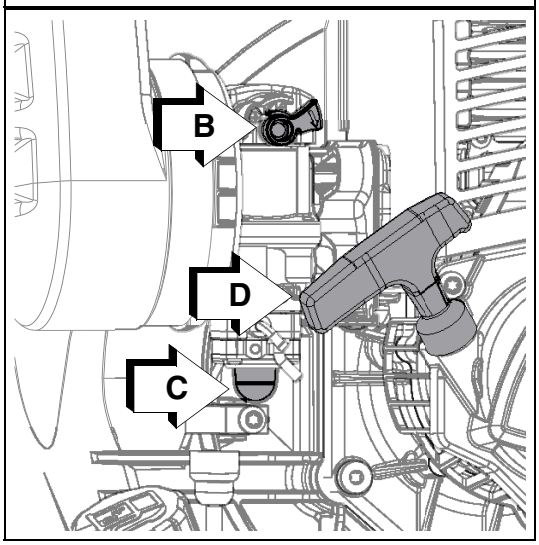

© 11/2018 ECHO Inc.

Downloaded from www.Manualslib.com manuals search engine

Stopping Engine

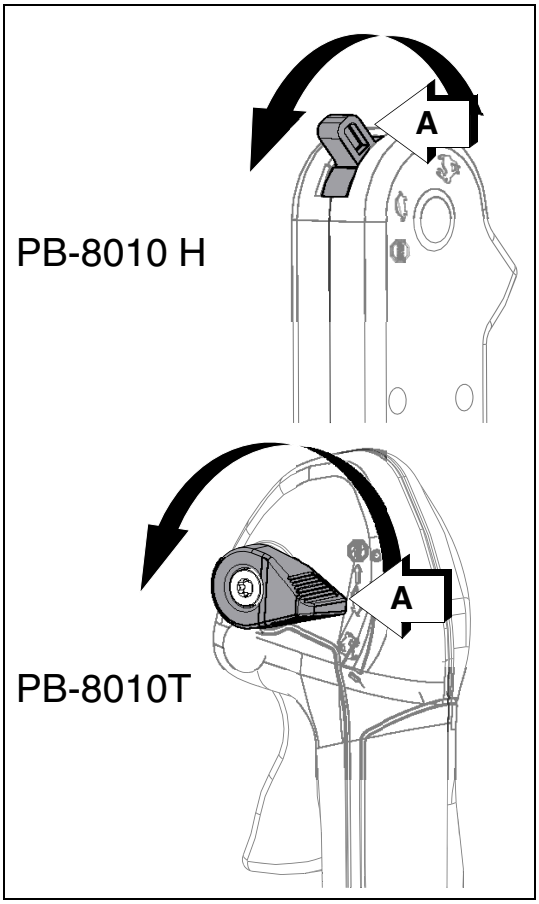

PB-8010 H

1. *Throttle Lever*

   Move throttle lever (A) to IDLE position and allow engine to return to idle before shutting off engine.

2. *Throttle Lever*

   Move throttle lever (A) to (STOP) position.

PB-8010 T

1. *Throttle Lever*

   Release throttle trigger. Move Throttle Lever (A) forward to idle position and allow engine to return to idle before shutting off engine.

2. *Throttle Lever*

   Move Throttle Lever (A) all the way forward to STOP position.

WARNING

If engine does not stop when stop switch is moved to STOP position, close choke - COLD START position - to stall engine. Have your dealer repair stop switch before using unit again.

Operating Blower

WARNING

Engine exhaust IS HOT, and contains Carbon Monoxide (CO), a poison gas. Breathing CO can cause unconsciousness, serious injury, or death. Exhaust can cause serious burns. ALWAYS position unit so that exhaust is directed away from your face and body.

© 11/2018 ECHO Inc.

Downloaded from www.Manualslib.com manuals search engine

WARNING

Always wear safety glasses, hearing protection and a face filter mask or serious personal injury may result. Do not point the blower pipe in the direction of people or pets.

NOTICE

Use reduced speed only when performing light-duty tasks or to comply with local noise regulations. Continuous low speed operation may allow fuel/oil residue to build-up on the piston and cause rapid build-up of carbon on the spark arrestor screen, resulting in overheating and engine damage. To reduce harmful build-up, run engine at wide open throttle for at least 5 minutes every hour, and inspect/clean the spark arrestor screen after approximately 40 hours of operation.

Read the Safety Section carefully.

NOTICE

To avoid engine damage due to over-revving, do not block blower pipe.

1. Use only during appropriate hours. Contact your local government for the ordinances affecting your area.
2. To reduce sound levels, limit the number of pieces of equipment used at any one time.
3. Allow the engine to warm up at a fast idle for a few minutes.

© 11/2018 ECHO Inc.

Downloaded from www.Manualslib.com manuals search engine

4. **PB-8010 H**

   Set engine speed with throttle position lever (A).

   PB-8010 T

   Control engine speed with throttle trigger (B), or for continuous use, set engine speed with throttle position lever (A).

5. Use lower speed to blow dry leaves from walks, patios and drives. Use rakes and brooms to loosen debris before blowing.

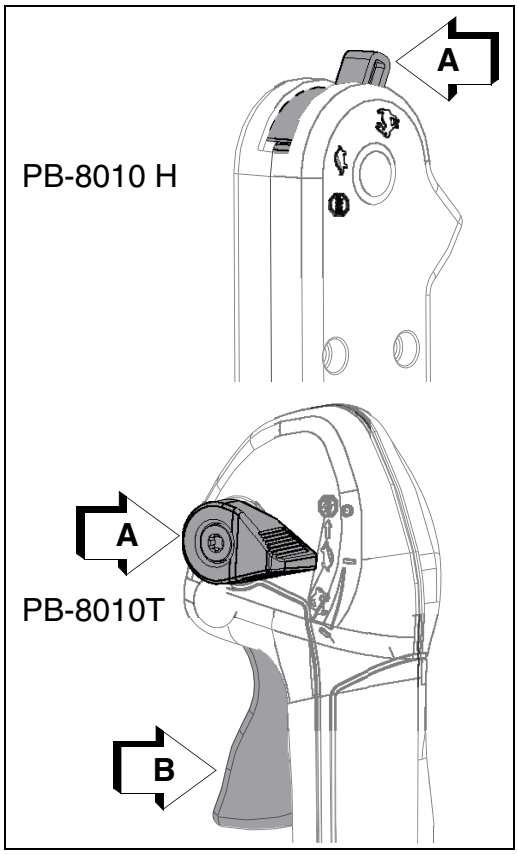

6. Additional speed may be necessary to clean grass and leaves from a lawn or flower bed.
7. Higher speed may be necessary to move gravel, dirt, snow, bottles or cans from a driveway, street, parking lot or stadium.
8. Always stop unit using stop engine procedure.

Note: Never use a higher speed setting than necessary to perform a task. Remember, the higher the engine speed, the louder the blower noise.

© 11/2018 ECHO Inc.

Downloaded from www.Manualslib.com manuals search engine

For Operator Comfort in Cold Weather Operation:

WARNING

This product should not be used in temperatures below 15° F (-9° C) otherwise damage to the fuel lines may occur.

1. Remove clips from back cushion. Remove back cushion (A) from frame.

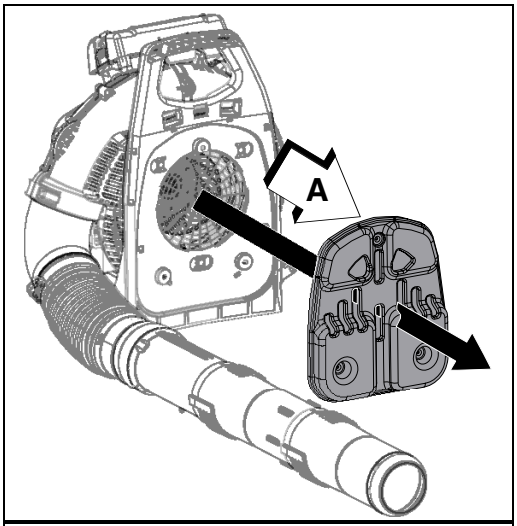

2. Install cold weather insert (B) on frame over air intake.
3. Install back cushion (A) to frame over intake cover.

Note: Blower performance may be reduced slightly.

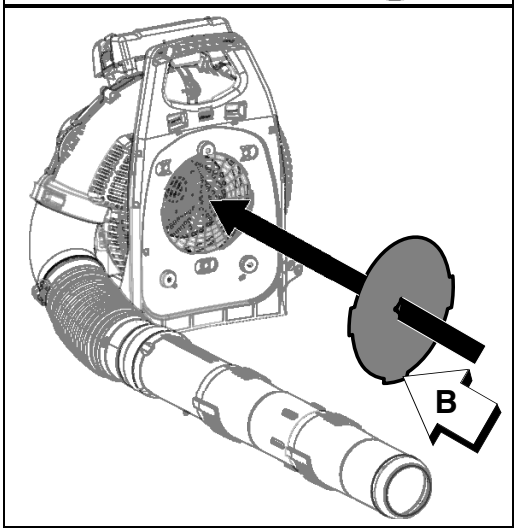

© 11/2018 ECHO Inc.

Downloaded from www.Manualslib.com manuals search engine

MAINTENANCE

WARNING

Moving parts can amputate fingers or cause severe injuries. Keep hands, clothing and loose objects away from all openings. Always stop engine, disconnect spark plug, and make sure all moving parts have come to a complete stop before removing obstructions, clearing debris, or servicing unit. Allow unit to cool before performing service. Wear gloves to protect hands from sharp edges and hot surfaces.

WARNING

Operating a poorly maintained unit can result in serious injuries to operator or bystanders. Always follow all maintenance instructions as written, otherwise serious personal injury may result.

Your unit is designed to provide many hours of trouble free service. Regular scheduled maintenance will help your unit achieve that goal. If you are unsure or are not equipped with the necessary tools, we recommend that you take your unit to a Servicing Dealer for maintenance. To help you decide whether you want to DO-IT-YOURSELF or have the Dealer do it, each maintenance task has been graded. If the task is not listed, see your Dealer for repairs.

Skill Levels

Level 1 = Easy to do. Common tools may be required.

Level 2 = Moderate difficulty. Some specialized tools may be required.

Level 3 = See your dealer.

Click HERE or go to http://www.echo-usa.com/products/maintenance-kit

or

HERE https://www.shindaiwa-usa.com/you-can.aspx

For information about maintenance kits.

© 11/2018 ECHO Inc.

Downloaded from www.Manualslib.com manuals search engine

Maintenance Intervals

COMPONENT/SYSTEM	MAINTENANCE PROCEDURE	SKILL LEVEL
Daily or Before Use		
Air Filter	Inspect/Clean [3]	1
Choke Shutter		
Fuel System	Inspect [1]	
Cooling System	Inspect/Clean	2
Recoil Starter Rope	Inspect/Clean [3]	1
Screws/Nuts/Bolts	Inspect/Tighten/Replace [3]	
Every Refuel		
Fuel System	Inspect [1]	1
3 Months		
Air Filter	Replace[3]	1
Fuel Filter	Inspect [3]	
Fuel Cap Gasket		
Spark Plug	Inspect/Clean/Replace [3]	
Muffler Spark Arrestor		2
Cylinder Exhaust Port	Inspect/Clean/De-carbon	
Yearly		
Fuel Filter	Inspect/Replace[3]	1
Fuel Cap Gasket	Replace [3]	

IMPORTANT NOTE - Time intervals shown are maximum. Actual use and your experience will determine the frequency of required maintenance.

MAINTENANCE PROCEDURE NOTES:

[1]Low evaporative fuel tanks DO NOT require regular maintenance to maintain emission integrity.

[2]See your dealer for maintenance.

[3]Replacement is recommended based on the finding of damage or wear during inspection

© 11/2018 ECHO Inc.

Downloaded from www.Manualslib.com manuals search engine

Air Filter

Level 1.

Parts Required: TUNE UP KIT.

1. Close choke (COLD START position). This prevents dirt from entering the carburetor throat when the air filter is removed. Brush accumulated dirt from air cleaner area.
2. Remove air filter cover, foam pre-filter, and air filter. Brush dirt from inside cover.

   Foam Pre-Filter:

   - Clean foam pre- filter (A) in water/detergent solution and rinse with clean water.
   - Wrap the foam pre-filter in a clean, dry cloth and squeeze (do not wring) dry. Allow to dry completely before reuse. Do not oil.

   Air Filter:

   - Lightly brush debris from air filter (B).
   - Replace filter if it is damaged, very dirty, or the rubber sealing edges are deformed.
   - If filter can be reused, be certain it fits tightly in the air filter cavity, and is installed with the original side out.

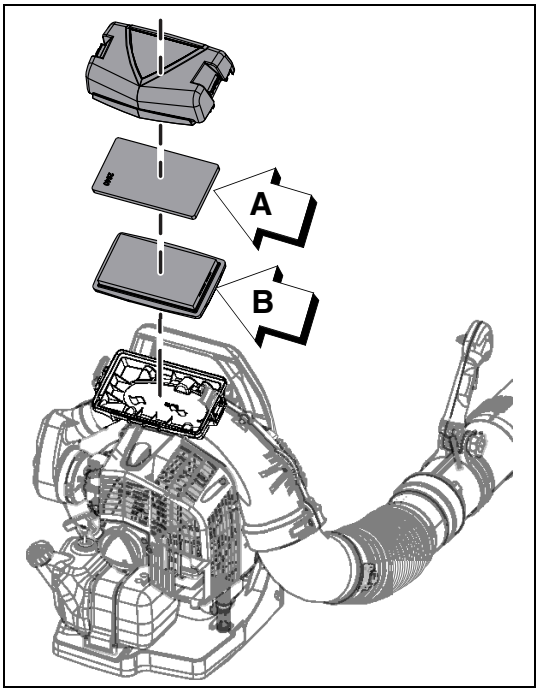

3. Assemble components in reverse order.

© 11/2018 ECHO Inc.

Downloaded from www.Manualslib.com manuals search engine

Fuel Filter

Level 1.

Parts Required: TUNE UP KIT.

DANGER

Fuel is VERY flammable. Use extreme care when mixing, storing or handling, or serious personal injury may result.

1. Use a clean rag to remove loose dirt from around fuel cap and empty fuel tank.
2. Pull the fuel filter from the tank.

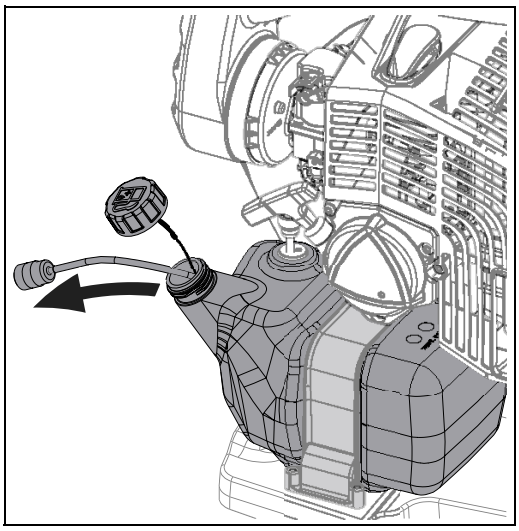

NOTICE

Do not damage fuel line while removing fuel filter from tank.

3. Remove the filter from the line and install the new filter.

Note: Federal EPA regulations require all model year 2012 and later gasoline powered engines produced for sale in the United States to be equipped with a special low permeation fuel supply hose between the carburetor and fuel tank. When servicing model year 2012 and later equipment, only fuel supply hoses certified by EPA can be used to replace the original equipment supply hose. Fines up to $37,500 may be enforced for using an un-certified replacement part.

© 11/2018 ECHO Inc.

Downloaded from www.Manualslib.com manuals search engine

Spark Plug

Level 2.

Parts Required: TUNE-UP KIT

NOTICE

Use only NGK CMR7H spark plug otherwise severe engine damage may occur.

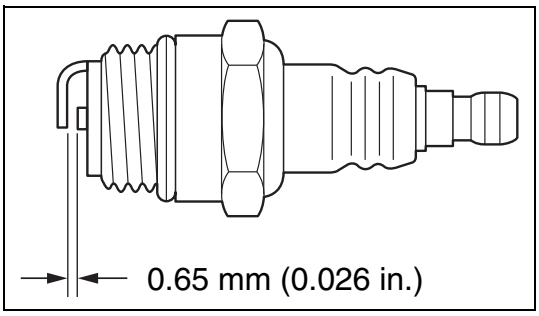

1. Remove spark plug and check for fouling, worn and rounded center electrode.
2. Clean the plug or replace with a new one. DO NOT sand blast to clean. Remaining sand will damage engine.
3. Adjust spark plug gap by bending outer electrode.
4. Tighten spark plug to 102-153 kgf • cm (86-133 in • lbf).

Cooling System

Level 2.

NOTICE

To maintain proper engine operating temperatures, cooling air must pass freely through the cylinder fin area. This flow of air carries combustion heat away from the engine.

Overheating and engine seizure can occur when:

- Air intakes are blocked, preventing cooling air from reaching the cylinder.
- Dust and grass build up on the outside of the cylinder. This build up insulates the engine and prevents the heat from leaving.

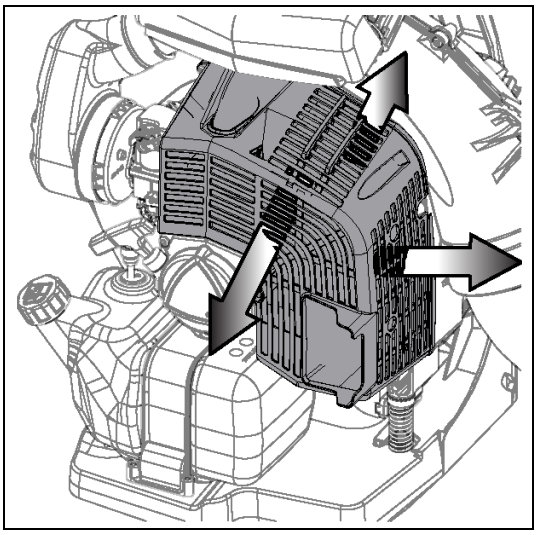

© 11/2018 ECHO Inc.

Downloaded from www.Manualslib.com manuals search engine

Removal of cooling passage blockages or cleaning of cooling fins is considered “Normal Maintenance.” Any failure attributed to lack of maintenance is not warranted.

Cleaning Grill

1. Brush accumulated debris from intake grill between backpack frame and blower housing.

Cleaning Cylinder Fins

1. Disconnect spark plug lead from spark plug.
2. Remove engine cover.
3. Clean cylinder fins (A) to allow cooling air to pass freely.
4. Install engine cover.
5. Connect spark plug lead.

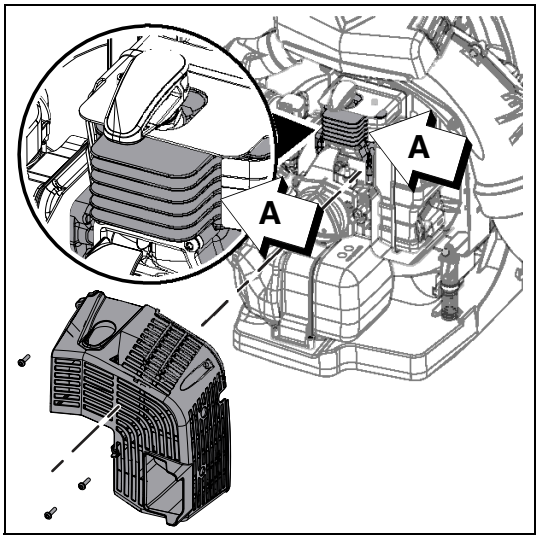

Exhaust System

Spark Arrestor Screen

Level 2.

Parts Required: Spark Arrestor Screen

NOTICE

Carbon deposits in muffler will cause a drop in engine output and overheating. Spark arrestor screen must be checked periodically.

1. Disconnect spark plug lead from spark plug.
2. Remove engine cover.
3. Remove spark arrestor screen (C) from muffler. Replace screen if plugged with carbon deposits.

Note: When cleaning carbon deposits, be careful not to damage the catalytic element inside muffler.

4. Install spark arrestor screen.
5. Install engine cover.

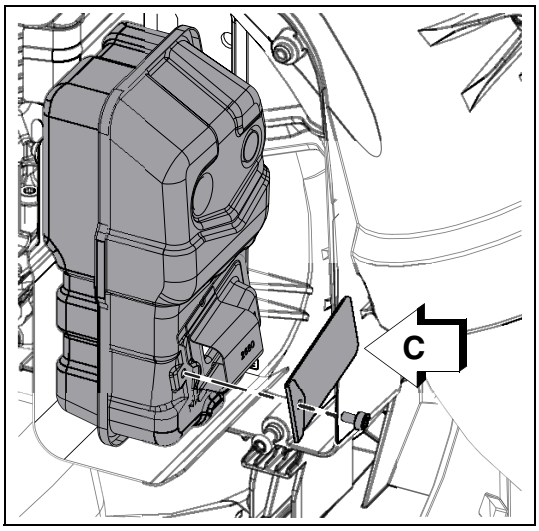

© 11/2018 ECHO Inc.

Downloaded from www.Manualslib.com manuals search engine

6. Connect spark plug lead.

Exhaust Port Cleaning

Level 2.

Parts Required: As needed: Muffler Gasket

1. Remove spark plug lead from spark plug, and remove engine cover.
2. Place piston at top dead center. Remove muffler (A) and muffler gasket (B).

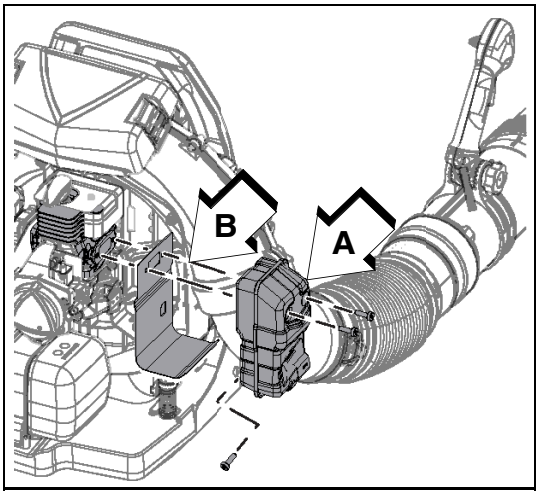

3. Use a wood or plastic scraping tool to clean deposits from cylinder exhaust port.

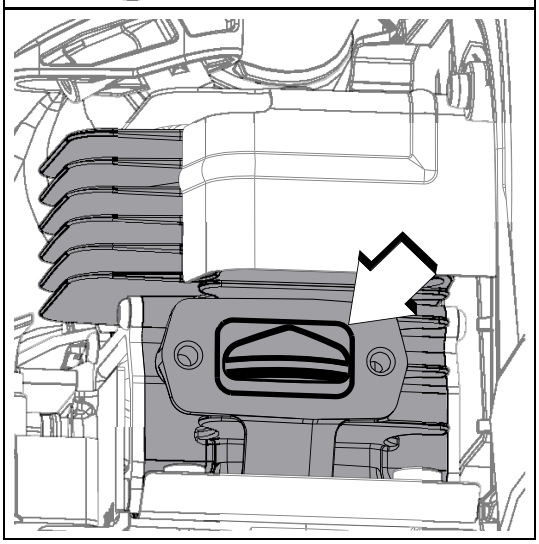

NOTICE

Never use a metal tool to scrape carbon from the exhaust port. Do not scratch the cylinder or piston when cleaning the exhaust port. Do not allow carbon particles to enter the cylinder.

4. Inspect muffler gasket, and replace if damaged.
5. Install muffler gasket and muffler.
6. Tighten muffler mounting bolts (or nuts) to 110-150 kgf•cm (95-130 in•lbf).

© 11/2018 ECHO Inc.

Downloaded from www.Manualslib.com manuals search engine

7. Install engine cover and attach spark plug lead.
8. Start engine, and warm to operating temperature.
9. Stop engine, and re-tighten mounting bolts (or nuts) to specifications.

Carburetor Adjustment

Engine Break-In

New engines must be operated a minimum duration of two tanks of fuel break-in before carburetor adjustments can be made. During the break-in period your engine performance will increase and exhaust emissions will stabilize. Idle speed can be adjusted as required.

High Altitude Operation

This engine has been factory adjusted to maintain satisfactory starting, emission, and durability performance up to 1,100 ft. (335 m) above sea level. To maintain proper engine operation and emission compliance above 1,100 ft. (335 m) ASL the carburetor may need to be adjusted by an authorized ECHO service dealer.

NOTICE

If the engine is adjusted for operation above 1,100 feet (335 m) above sea level, the carburetor must be re-adjusted when operating the engine below 1,100 ft. (335 m) above sea level, otherwise severe engine damage may result.

Level 2.

Parts Required: None

Note: Every unit is run at the factory and the carburetor is set in compliance with emission regulations. Carburetor adjustments, other than idle speed, must be performed by an authorized ECHO dealer.

Idle Adjustment

Before adjustment make sure that:

- Air filter is clean and properly installed.
- Spark arrestor screen and muffler are free of carbon.
- Blower pipes are installed.

1. Start engine, run at idle for one minute.

© 11/2018 ECHO Inc.

Downloaded from www.Manualslib.com manuals search engine

2. Complete warm up by running at full throttle for 5 minutes, operating choke twice to clear air from carburetor chambers.
3. Check idle speed and reset if necessary. If a tachometer is available, idle speed screw (A) should be set to the specifications found on “Specifications” Page of this manual. Turn idle screw (A) clockwise to increase idle speed; counter clockwise to decrease idle speed.

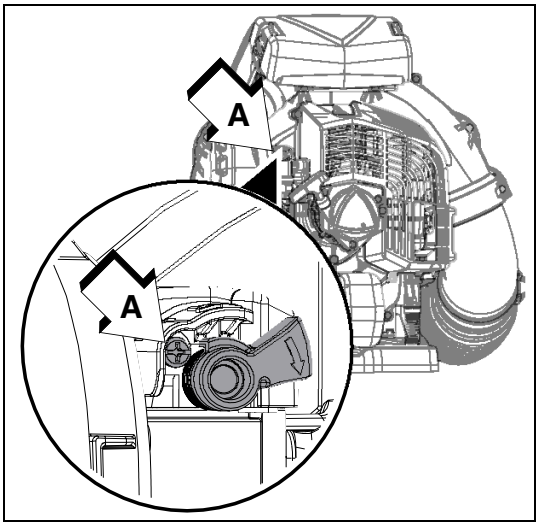

© 11/2018 ECHO Inc.

Downloaded from www.Manualslib.com manuals search engine

Throttle Cable Adjustment (PB-8010 T only)

Level 1

If engine idle speed changes when blower pipe is moved, or engine will not reach full wide open throttle speed, adjust throttle cable.

1. Loosen handle adjustment knob (C) and tilt Tube Throttle handle forward to expose Adjustment Screw (D).

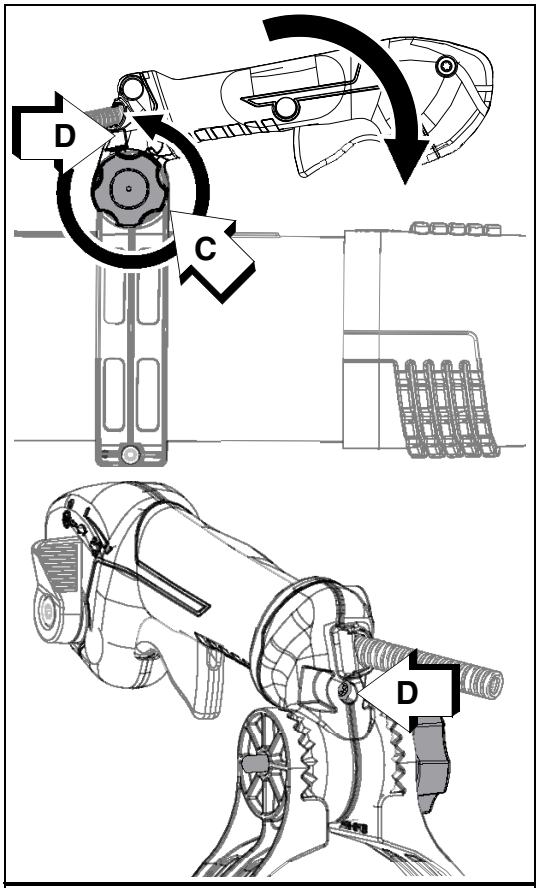

2. Turn Adjustment Screw until Throttle Trigger free play is 4 - 6 mm (3/16-1/4 in.).
3. After adjustment, squeeze and release Throttle Trigger several times to verify Carburetor Throttle Shaft has full range of movement from idle to wide open throttle positions.

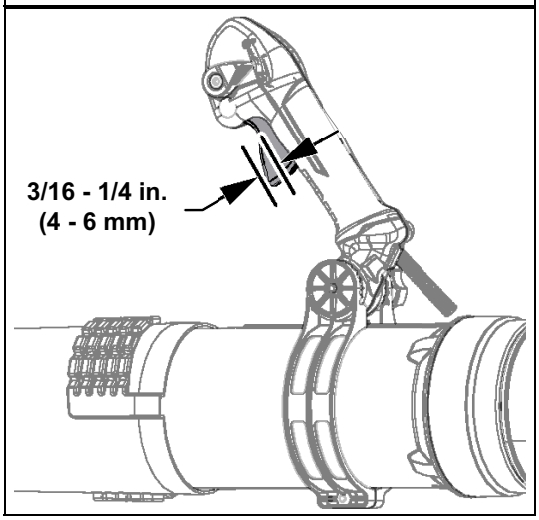

© 11/2018 ECHO Inc.

Downloaded from www.Manualslib.com manuals search engine

TROUBLESHOOTING

DANGER

Fuel vapors are extremely flammable and may cause fire and/or explosion. Never test for ignition spark by grounding spark plug near cylinder plug hole, otherwise serious personal injury may result.

ENGINE PROBLEM TROUBLESHOOTING CHART				
Problem	**Check**	**Status**	**Cause**	**Remedy**
Engine starts hard or Engine does not start	Fuel at carburetor	No fuel at carburetor	Fuel strainer or fuel line obstructed	Clean or replace See your dealer
Engine starts hard or Engine does not start	Fuel at cylinder	No fuel at cylinder	Carburetor	See your dealer
		Muffler wet with fuel	Fuel mixture too rich	OPEN choke Clean or replace air filter Adjust carburetor See your dealer
	Spark at end of plug wire	No spark	Ignition at STOP position Electrical problem Interlock switch	Move ignition away from STOP position. See your dealer
	Spark at plug		Incorrect gap - Covered with carbon - Fouled with fuel - Plug defective	Adjust to 0.65mm (0.026 in.) Clean or replace plug

© 11/2018 ECHO Inc.

Downloaded from www.Manualslib.com manuals search engine

ENGINE PROBLEM TROUBLESHOOTING CHART				
Problem	**Check**	**Status**	**Cause**	**Remedy**
Engine runs, but dies or Engine does not acceler-ate properly	Air filter	Air filter dirty	Normal wear	Clean or replace
	Fuel filter	Fuel filter dirty	Contaminants or residue in fuel	Replace filter or replace fuel
	Fuel vent	Fuel vent plugged	Contaminated fuel	Clean or replace
	Spark plug	Plug dirty or worn	Normal wear	Clean and adjust or replace
	Carburetor	Improper adjustment	Vibration	Adjust
	Cooling system	Cooling system dirty or plugged	Extended oper-ation in dirty or dusty locations	Clean
	Spark arres-tor screen	Spark arres-tor screen plugged	Normal wear	Replace
Engine does not crank	N/A		Internal engine problem	See your dealer

© 11/2018 ECHO Inc.

Downloaded from www.Manualslib.com manuals search engine

STORAGE

WARNING

During operation the muffler or catalytic muffler and surrounding cover become hot. Always keep exhaust area clear of flammable debris during transportation or when storing, otherwise serious property damage or personal injury may result.

Long Term Storage (Over 30 Days)

Do not store your unit for a prolonged period of time (30 days or longer) without performing protective storage maintenance which includes the following:

1. Store unit in a dry, dust free place, out of the reach of children.

DANGER

Do not store in enclosure where fuel fumes may accumulate or reach an open flame or spark.

2. Place the stop switch or lever in the “OFF” position.
3. Remove accumulation of grease, oil, dirt and debris from exterior of unit.
4. Perform all periodic lubrication and services that are required.
5. Tighten all the screws and nuts.
6. Drain fuel tank completely. Press purge bulb 6 -7 times to remove remaining fuel from carburetor then drain the tank again. Close choke, start and run the engine until it stops due to lack of fuel.
7. Allow engine to cool. Remove the spark plug lead from the spark plug. Remove the spark plug. Pour 7 cc (0.25 oz.) of fresh, clean, two-stroke engine oil into the cylinder through the spark plug hole.
8. Pull the recoil starter handle 2-3 times to distribute the oil inside the engine.
9. Observe the piston location through the spark plug hole. Pull the recoil handle slowly until the piston reaches the top of its travel and leave it there.
10. Install the spark plug. Connect the spark plug lead to the spark plug.
11. Remove blower pipe assembly from unit.

© 11/2018 ECHO Inc.

Downloaded from www.Manualslib.com manuals search engine

SPECIFICATIONS

MODEL	PB-8010 H	PB-8010 T
Length (with pipes)	1503 mm (59.2 in.)	
Width (with pipes)	624 mm (24.6 in.)	597 mm (23.5 in.)
Height (with pipes)	544 mm (21.4 in.)	
Weight (full tank) (w th pipes)	13.1 kg (28.8 lb.)	13 kg (28.6 lb.)
Engine Type	Air cooled, two-stroke, single cylinder gasoline engine	
Bore	53 mm (2.1 in.)	
Stroke	36.2 mm (1.4 in.)	
Displacement	79.9 cc (4.9 cu^3)	
Exhaust	Spark arrestor muffler or spark arrestor muffler with catalyst	
Carburetor	Diaphragm with purge pump	
Ignition System	Flywheel magneto, capacitor discharge ignition type	
Spark Plug	NGK CMR7H – Gap 0.65 mm (0.026 in.)	
Fuel	Mixed (Gasoline and Two-stroke Oil)	
Gasoline/Oil Ratio	50:1	
Gasoline	Use 89 Octane unleaded. Do not use fuel containing methyl alcohol, more than 10% ethyl alcohol or 15% MTBE. Do not use alternative fuels such as E-15 or E-85.	
Oil	ISO-L-EGD (ISO/CD 13738) and J.A.S.O. M345-FD, two-stroke, air-cooled engine oil.	
Fuel Tank Capacity	2.48 L (83.8 US fl. oz.)	
Starter System	Automatic Recoil Starter, centrifugal type	
Idle Speed	2,500 RPM	
Wide Open Throttle Speed	7,800 RPM	
Maximum Air Speed with pipes	94.5 m/sec (211 mph)	
Air Volume	30.3 m^3/min. (1071 $ft.^3$/min.)	
Sound Level at 15.25 m (50 ft.) dB(A) scale per ANSI B175.2	79.3 dB(A)	

© 11/2018 ECHO Inc.

Downloaded from www.Manualslib.com manuals search engine

PRODUCT REGISTRATION

Thank you for choosing ECHO Power Equipment

Please go to http://www.echo-usa.com/Warranty/Register-Your-ECHO to register your new product on-line. It's ***FAST*** and ***EASY***! NOTE: your information will never be sold or misused by ECHO, Inc. Registering your purchase enables us to contact you in the unlikely event of a service update or product recall, and verifies your ownership for warranty consideration.

If you do not have access to the Internet, you can complete the form below and mail to:

ECHO Inc., Product Registration, PO Box 1139, Lake Zurich IL 60047.

© 11/2018 ECHO Inc.

Downloaded from www.Manualslib.com manuals search engine

PRODUCT REGISTRATION CARD : TARJETA DE REGISTRO : CARTE D'ENREGISTREMENT DU PRODUIT

ONLINE OPTION: Register online and save a stamp! You will be alerted of product updates and/or be sent new ECHO product information and special offers. Simply go to: **www.echo-usa.com**

OPCIÓN POR INTERNET: ¡Registrese en la pagina web y ahorre una estampilla! Le alertarán sobre actualizaciones del producto y/o se le enviara información sobre los nuevos productos ECHO y las ofertas especiales. Simplemente visite: **www.echo-usa.com**

OPTION EN LIGNE : Enregistrer en ligne et épargner un timbre! Vous serez informé sur les nouveaux produits ECHO et les mises à jour de produit ainsi que les offres spéciales. Simplement visitez le: **www.echo-usa.com**

Please Print : Por Favor Enscriba Con Letra De Molde : En Lettre Carré S.V.P.

Confidential: Information provided will not be shared or sold

Purchaser's Name : Nombre del Comprador : Nom de l'acheteur

Address : Dirección : Adresse

City : Ciudad : Ville | *State : Estado : Province* | *Zip Code : Código Postal : Code Postal*

E-Mail Address : Dirección De Correo Electrónico : Courrier Électronique

Phone Number : Número De Teléfono : Téléphone | *Date of Purchase : Fecha de la Compra : Date de l'achat*

Where Purchased : Nombre del Almacén donde fue Comprado : Lieu d'achat

Model Number : Numero del Modelo : No. de modéle | *Serial Number : Numero de Serie : No. de série*

Registering your purchase enables us to contact you in the unlikely event of a service update or product recall and verifies your ownership in the event of loss. : El registrar su compra nos permite estar en contacto con usted en caso de cualquier evento como el aviso de tiempo de servicio o la revocación del producto y verificación de propiedad en caso de robo o pérdida. : L'enregistrement de votre achat nous permettra de vous contacter dans le cas improbable de modifications des instructions d'entretien ou de rappel du produit et vérifier que vous étes le propriétaire en cas de vol ou de perte.

Primary use of tool: ☐ Professional ☐ Homeowner ☐ Rental Equip.
Uso primario de la herramienta: ☐ Profesional ☐ Dueño de casa ☐ Alquiler
Usage principal : ☐ Professionnel ☐ Residential ☐ Location

Do you wish to receive periodic ECHO product information and special offers by e-mail? ☐ Yes ☐ No
¿Desea usted recibir información periódica y ofertas especiales por correo electronico sobre el producto ECHO? ☐ Yes ☐ No
Souhaitez-vous recevoir périodiquement de l'information sur les produits ECHO et les offres spéciales par courrier électronique ? ☐ Oui ☐ Non

Did you visit the ECHO website before purchasing your product?
☐ Yes ☐ No
Visitó usted la pagina web ECHO antes de comprar su producto?
☐ Sí ☐ No
Avez-vous visité le site d'ECHO avant de procurer votre produit?
☐ Oui ☐ Non

What factor(s) most influenced your purchase?
☐ Performance ☐ Price ☐ Dealer
☐ Reliability ☐ Prior Experience ☐ Quality
☐ Friend/Family ☐ Brand ☐ Warranty

¿Qué factor(es) influenció más en su compra?
☐ Funcionamiento ☐ Precio ☐ Distribuidor
☐ Confiabilidad ☐ Experiencia Anterior ☐ Calidad
☐ Amigo/Familia ☐ Marca ☐ Garantía

Quel facteur (facteurs) vous a influencé le plus?
☐ Performance ☐ Prix ☐ Marchand
☐ Fiabilité ☐ Expérience ☐ Qualité
☐ Ami/Famille ☐ Marque ☐ Garantie

ECHO INC., 400 Oakwood Rd., Lake Zurich, IL 60047
1.800.432.ECHO WWW.ECHO-USA.COM

X7572270206 02-2012

© 11/2018 ECHO Inc.

Downloaded from www.Manualslib.com manuals search engine

NOTES

© 11/2018 ECHO Inc.

Downloaded from www.Manualslib.com manuals search engine

© 11/2018 ECHO Inc.

Downloaded from www.Manualslib.com manuals search engine

(H) P49415001001 - P49415999999

(T) P49515001001 - P49515999999

(H) P48715001001 - P48715999999

(T) P48615001001 - P48615999999

ECHO INCORPORATED
400 Oakwood Road
Lake Zurich, IL 60047
www.echo-usa.com

Downloaded from www.Manualslib.com manuals search engine